DAYHEEM
ELECTRIC INDUSTRY

Explosion proof
Electrical Equipment

PRODUCT CATALOGUE

2026 | VERSION 1.0

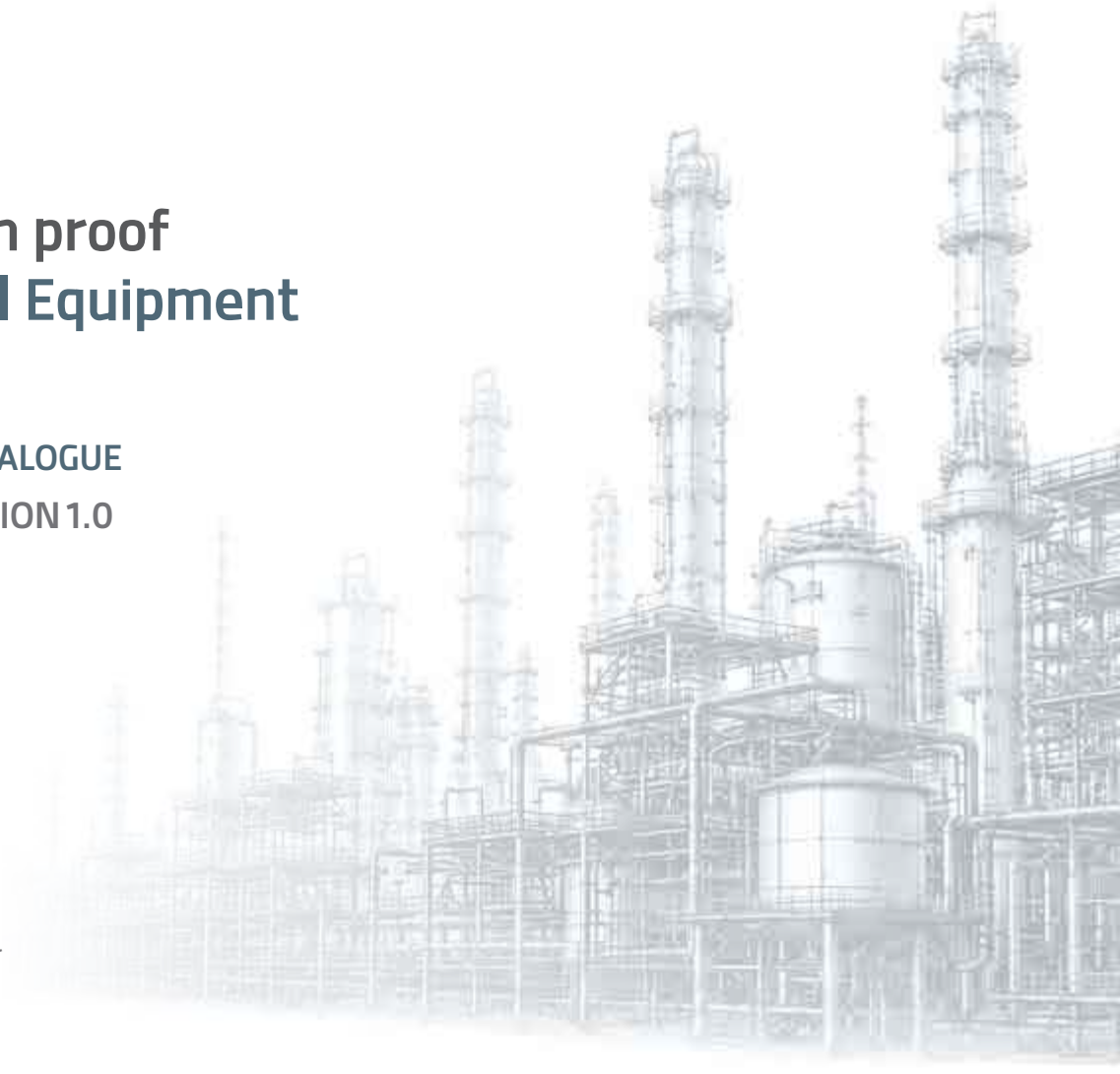

www.dayheem.ir

■ معرفی شرکت

شرکت برق و صنعت دیهیم با تکیه بر تجربیات و سوابق مدیران خود در زمینه‌ی تولید تجهیزات برقی ضدانفجار در سال ۱۳۹۰ تاسیس گردید. از ابتدای فعالیت این شرکت هدف گذاری برای اخذ گواهینامه‌های ATEX و IECEx صورت گرفت و در سال ۱۳۹٤ این شرکت موفق به اخذ گواهینامه‌های ATEX از شرکت LOM اسپانیا گردید. در ادامه با افزایش تنوع محصولات تولیدی، این شرکت همکاری خود را با شرکت اپیل آغاز نمود و در سال ۱٤۰٤ موفق به اخذ گواهینامه‌های IECEx برای گروه‌های جدید محصولات خود گردید.

در حال حاضر محصولات تولید این شرکت شامل انواع محصولات برقی ضد انفجار از جمله جعبه تقسیم، کنترل استیشن، تابلوهای توزیع، کنترل و روشنایی، گلند و اتصالات کابل می‌باشد.

نام این شرکت در سامانه‌ی فهرست بلند سازندگان مورد تایید وزارت نفت ep.mop و نیز فهرست سازندگان شرکت ملی صنایع پتروشیمی NPC ثبت گردیده است.

این شرکت سابقه ی همکاری با اغلب شرکت‌های کارفرما، پیمانکار و نیز بهره برداران مختلف صنعت نفت و گاز و پتروشیمی را در کارنامه‌ی خود دارد و در بیش از ٤۰۰ پروژه‌ی مختلف به ایفای نقش خود پرداخته است. ذیلا برخی از سوابق کاری این شرکت آورده می‌شود.

■ برخی از پروژه‌های شاخص

این شرکت در بیش از ٤۰۰ پروژه‌ی مختلف در صنایع نفت، گاز و پتروشیمی حضور داشته است.

ردیف	نام پروژه	شرکت خریدار	کارفرما	پروژه
۱	تابلو برق ضد انفجار	رادمان	NISOC	GHALEH NAR DESALTING & SWEETENING PLANT PROJECT
۲	تابلو برق ضد انفجار و صنعتی	پایندان	Petroleum Engineering & Development Company (PEDEC)	Gurreh-Jask Pump Station No. 5
۳	تابلو برق ضد انفجار و صنعتی	جندی شاپور	SHIRAZ OIL REFINING COMPANY (SORC)	Light Naphtha Isomerization (ISOM) & Naphtha Splitter
٤	تابلو برق ضد انفجار	بدر شرق	Badr-e-Shargh Petrochemical Complex	MTPD Badr-e-Shargh Methanol Plant 5000
۵	جانکشن باکس ضد انفجار	پادجم	JAM PETROCHEMICAL COMPANY	200ktpy ABS & 60ktpy SB/SBS/LC plants Assaluyeh, IRAN
٦	جانکشن باکس ضد انفجار	گاما	PARS OIL & gas company (NIOC)	Jask Oil Terminal & Marine Facilities
۷	جانکشن باکس ضد انفجار	عمران ساحل	National Petrochemical Co. as "NPC"	Development and Revamping of Berth 1 To 15 Of Pars Petrochemical Port in Assaluyeh
۸	جانکشن باکس ضد انفجار	پتروپارس	Petroleum Engineering and Development Company (PEDEC)	South Azadegan Oil Field Development - Central Treatment and Export Plant (CTEP)
۹	"جانکشن باکس ضد انفجار تابلو برق ضد انفجار"	پتروساخت چهلستون	ARMAN SEPAHAN PETROCHEMICAL	ISO PROPANOL PLANT (IPA)
۱۰	"جانکشن باکس ضد انفجار گلند ضد انفجار"	ارغوان گستر ایلام	Petro Iranian Downstream Industries Development Company (PIDIDC)	ILAM POLYPROPYLENE PLANT
۱۱	"جانکشن باکس ضد انفجار گلند ضد انفجار"	پیدک/صنایع انرژی ایران	Persian Gulf Bid Boland Gas Refinery Company	AGHAJARI 1,3,4,5 COMPRESSION STATIONS
۱۲	"جانکشن باکس ضد انفجار گلند ضد انفجار و صنعتی"	دانیال پترو	Iranian Gas Engineering & Development Company	Khormooj Gas Compressor Station (EPC Project)
۱۳	کنترل استیشن صنعتی	انرژی گستر نصیر	hodhadaye Dezful Sugar Company	Shodhadaye Dezful Sugar Factory
۱٤	کنترل استیشن صنعتی و ضد انفجار	پترو سازه مبین	National Iranian South Oilfields Company (NISOC)	Gas Dehydration & Compressor Station of Aghajari-02 & Pazanan-01 and related Pipe Lines
۱۵	کنترل استیشن ضد انفجار	سپاهان NDEC	Sepahan Oil Company (SOC)	Fully Refined Wax Project- Esfahan
۱٦	کنترل استیشن ضد انفجار	عمران ساحل	P.O.G.C	Tombak Services and Export Port
۱۷	کنترل استیشن ضد انفجار	OIEC	IRANIAN CENTRAL OIL FIELDS COMPANY (ICOFC)	NGL-3100 Project
۱۸	کنترل استیشن ضد انفجار و صنعتی	مارون کاران	NISOC	Gas Gathering from Production Tanks in Gachsaran I & II Production Units (E01 & E03)
۱۹	کنترل استیشن ضد انفجار و صنعتی	در ریز	FARASAKOU ASSALUYEH CO.	STORAGE TERMINAL DEVELOPMENT PLAN
۲۰	کنترل استیشن ضد انفجار و صنعتی	اطلس پالایش	Atlas Jey Arvand Oil Refining Company	Chabahar Bitumen Storage Plant
۲۱	کنترل استیشن ضد انفجار و صنعتی	پناه صنعت پارت	National Iranian South Oil Fields Company (NISOC)	Bibi Hakimeh 1 Gas Compressor Station, Dehydration and Related Pipeline

■ گواهینامه‌ها و تاییدیه‌ها

نمادی از تعهد ما و انطباق با استانداردهای بین المللی

گواهینامه‌ها

ATEX, IECEX

و سایر گواهینامه‌های بین المللی



تاییدیه‌ها

تایید صلاحیت

در فهرست بلند سازندگان (ep.mop و NPC)



رضایتنامه‌ها

اعتماد کارفرمایان

پیمان‌کاران ،بهره‌برداران



همراه صنعت
در پروژه‌های بزرگ

ایمنی
در محیط‌های خطرناک

انطباق
با استانداردهای جهانی

کیفیت
قابل اعتماد

MANUFACTURING
FACILITIES

Machining, mold making and sheet-metal faication

MACHINING & MOLD MAKING







Cnc milling machine, cnc lathe, radial drill, band saw

SHEET-METAL FABRICATION





Press ake | Guillotine | Punch press | TIG / MIG-MAG welding

RUBBER PARTS MANUFACTURING




ELECTRICAL ASSEMBLY




LASER MARKING



CASTING INDUSTRY





PRODUCT RANGES

Dayheem Electric Industry Co. manufactures explosion proof electical equipment and cable glands for hazardous-area applications.

DAYHEEM
ELECTRIC INDUSTRY

Explosion Proof Enclosures

CEN Series



Small switchgear and instrument enclosure with threaded or spigot lid.

Page 08

LCS Series



Modular local control stations for push buttons, selectors and instruments.

Page 14

STB Series



Compact terminal and junction boxes in stainless or sheet steel.

Page 18

SJB Series



Hinged lid terminal and junction boxes for rail-mounted Ex terminals.

Page 22

DJB Series



Die-cast aluminium junction boxes in several certified sizes.

Page 28

EJB Series



Large explosion proof enclosures for switchgear and control assemblies.

Page 32

Explosion Proof Accessories

ACCESSORIES

Push-button, emergency-stop, selector-switch, signal-lamp and eakar actuators.

Page 38



Cable Glands

CG-IN Series



Industrial single-compression glands for non-armoured cables.

Page 42

CG-IA Series



Industrial double-compression glands for armoured cables.

Page 44

CG-EN Series



Explosion proof glands for non-armoured cables.

Page 46

CG-EA\EL Series



Explosion proof glands for armoured and lead-sheathed cables.

Page 50

Cable Glands Accessories

EARTH TAG, SHROUD, LOCK NUT, CELLULOSIC WASHER



Page 54



Page 55



Page 56



Page 57

CEN Series

Small switchgear and instrument enclosure with threaded or spigot lid.

CEN Series

The CEN series consists of compact, copper-free die-cast aluminium enclosures available with either threaded or spigot lids. The series is suitable for use as a junction box, switchgear enclosure or instrument enclosure.

Features

Category: Explosion proof Enclosure

Material: Copper-free Die-Casting Aluminum Alloy

Marking: Ex d IIC T6 IP66

Application: Junction box, switchgear Box, Instrument Box

Nomenclature:

CEN

- **Type of actuator** (0: No actuator, 1: SGL 1, 2: PBT 1, 3: SLC 1, 4: EMG 1)
- **Number of entries** (1: One way, 2: 2 way, 3: 3 way, 4: 4 way)
- **Application** (1: Junction Box, 2: Switchgear, 3: Instrument Box)

Technical Data	
Explosion proof switchgear box CEN Series, Suitable for Zone 1,2,21,22t	
Marking to 94/9/EC	Gas: II 2 G Ex d IIC T6 Gb
	Dust: II 2 D Ex t IIIC T85°C Db
Ambient Temperature	-20°C to +55°C
EC Type examination certificate	LOM 15 ATEX 2015 X

CEN Series

CEN 1

Features

Category: Explosion proof Enclosure

Material: Copper-free Aluminum Alloy

Marking: Ex d IIC T6 IP66

Application: Junction box

Maximum Number of Terminals			
Type	Manufacturer	Rated Current	QTY
RMT 2.5	Raad-Iran	20 A	6
RMT 4	Raad-Iran	41 A	4
B16	Raad-Iran	76 A	4

Pillar Terminal 4 pole can be fitted

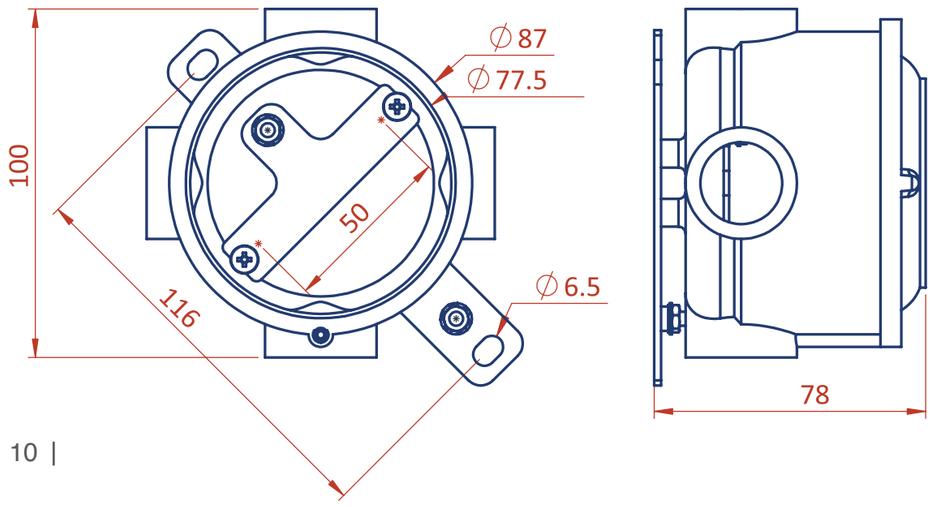

CEN Series

CEN 2

The explosion proof switchgear box CEN 2 - -, can be equipped with numerous electrical components including rotary selector switch, contact block, signal lamp, etc. The spigot lid allows user to wire the enclosure easily. The M25x1.5 lid hole can be mounted with numerous Dayheem actuators.

Internal Electrical component					
Component	Type	Manufacturer	Rated Current	No. of Phases	QTY
Selector Switch	2 Stage 4 Contact	TRS, emas, K&N	16 A	3	1
	1 Stage 2 Contact	TRS, emas, K&N	25 A	1	1
Contact Block	ZB2-BE	Schneider	6 A	1	6
Signal Lamp	LED, RSC	Raad	24/220 V AC	1	1

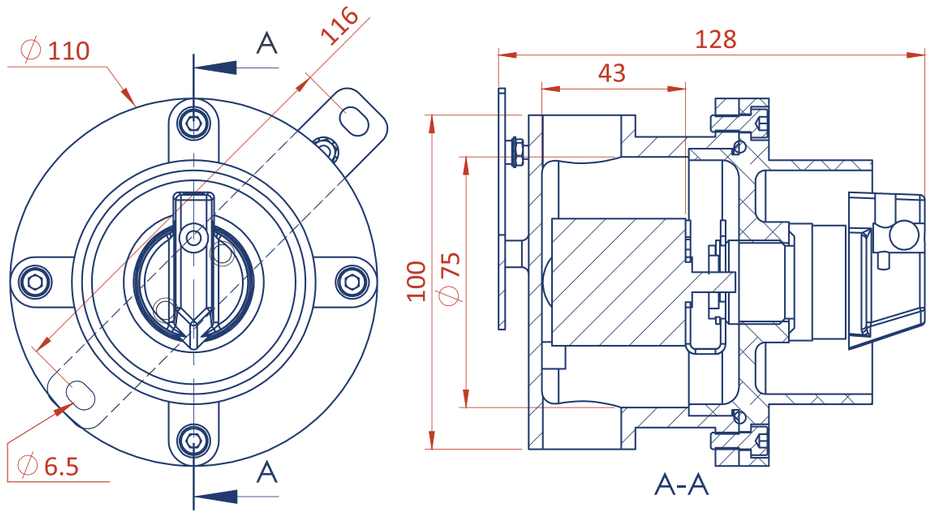

CEN Series

CEN 3

The explosion proof instrument box CEN 3 - - can be equipped with numerous type of measuring and indicating electrical apparatus including ammeter, voltmeter, etc. The transparent lid allows user to see inside the enclosure. The enclosure is ideal to be used for circular ø52 ammeters as well as rectangular 48x48 and can be connected via Ex. bushing to another enclosure.

Inside Meters			
Component	Type	Manufacturer	Rated Current
Ammeter	48x48	Ziegler	Class 1, CT operated
Voltmeter	48x48	Ziegler	Class 1, CT operated

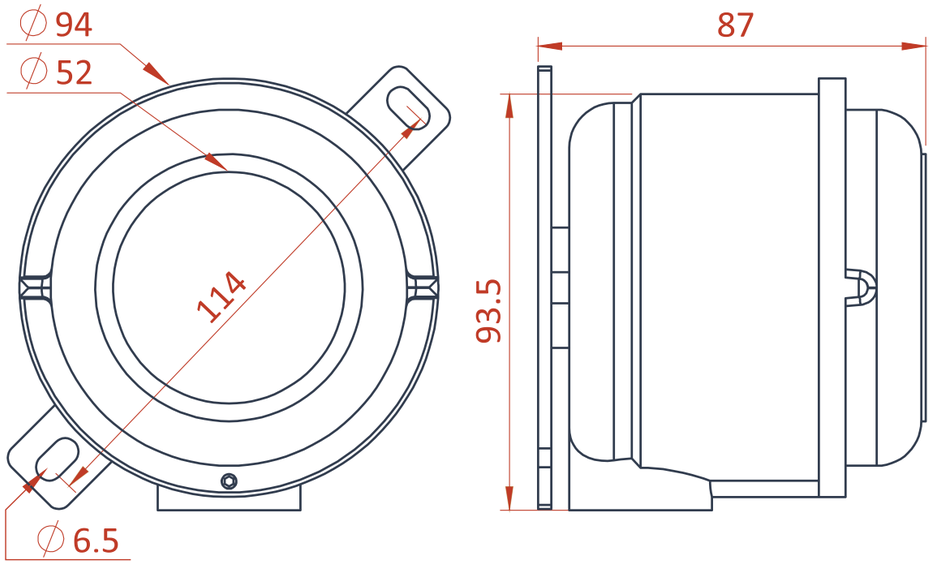





LCS Series

Modular local control stations for push buttons, selectors and instruments.

LCS Series

The LCS series of enclosures, can be properly used as local control stations with numerous kinds of actuators. The modular design allows users to assemble whatever they need including push button, selector switch and other Dayheem actuators. The bushing facilitates connection between the enclosures. Using Dayheem CEN - - - can provide an extra component which can be a switch, instrument, etc. The enclosures have 2 M25x1.5 entry holes as standard; any other thread can be supplied on request.

Features

Category: Explosion proof Enclosure

Material: Copper-free Die Casting Aluminum Alloy

Marking: Ex d IIB+H2 T6 IP66

Application: Switchgear Box, Local Control Station

Nomenclature:

LCS_

- **Number of actuators** (2: 2 way, 3: 3 way)

Technical Data	
Explosion proof Enclosure, LCS Series, Suitable for Zone 1,2,21,22	
Marking to 94/9/EC	Gas: II 2 G Ex d IIB+H2 T6 Gb
Degree of Protection	IP 66
Ambient Temperature	-20°C to +55°C
EC Type examination certificate	LOM 15 ATEX 2014 U
Material	Copper-free Die Casting Aluminum Alloy





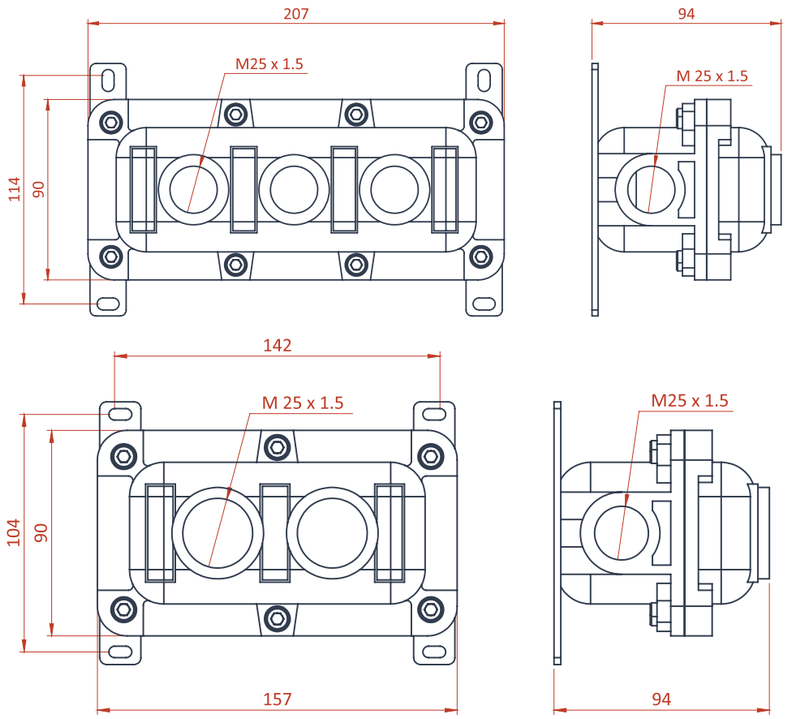
207
M25 x 1.5
114
90
94
M 25 x 1.5
142
M 25 x 1.5
104
90
157
M25 x 1.5
94


START
STOP
LOCAL OR REMOTE

STB Series

Compact terminal and junction boxes in stainless or sheet steel.

STB Series

The STB series is intended for terminal and junction-box applications where frequent access is not required.

Features

Category: Explosion proof Enclosure, without hinge

Material: Stainless Steel AISI 316L/304, Sheet Steel

Marking: Ex e IIC T6 IP66

Application: Ex. Junction Box, Industrial Control Station

Technical Data	
Explosion proof Enclosure, STB Series, Suitable for Zone 1,2,21,22	
Marking to 94/9/EC	Gas: II 2 G Ex e IIC T6 Gb
	Dust: II 2 D Ex t IIIC 100-C
Degree of Protection	IP 66
Ambient Temperature	-20°C to +55°C
EC Type examination certificate	LOM 15 ATEX 2013
Material	Stainless Steel AISI 316L/304
	Sheet Steel ST 37
	Finish in epoxy powder electrostatic coating
	Thickness: 1.5 mm

Permitted Dissipated Wattage (W)				
Type	T6 (T85°C)		T5 (T100°C)	
	T_a<40°C	T_a<55°C	T_a<40°C	T_a<55°C
STB 1	11.7	7.3	16	11.7
STB 2	17.8	11.1	24.4	17.8
STB 3	39	24.4	53.6	39

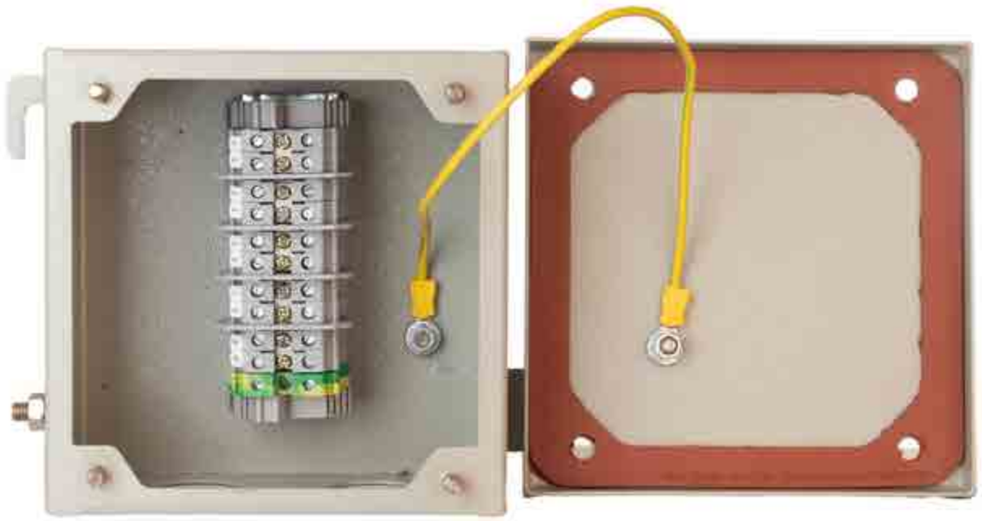

Maximum Number of Terminals							
Type	Size (mm)	No. of Rails	Max No. of terminals				
			Wire cross section (mm2)				
	LxWxH		2.5	4	6	10	16
STB 1	163x163x100	1	22	21	16	13	_
STB 2	263x163x100	2	57	54	43	34	27
STB 3	413x263x115	2	107	100	80	64	51

Cable Entries Capacity					
Model	STB 1	STB 2		STB 3	
Gland Size	Each Side	Greater side	Smaller Side	Greater side	Smaller Side
M16	8	14	8	33	14
M20 S	6	12	6	21	12
M20 A	8	12	8	27	12
M25	4	6	4	16	6
M32	2	4	2	8	4
M40	2	3	2	5	3



Part No.	Part Name	Material
1	Body	Stainless steel AISI 316L/304, Thickness: 1.5 mm
2	Lid	Stainless steel AISI 316L/304, Thickness: 1.5 mm
3	Stud Weld	M6x15, Stainless Steel A2.70
4	Cap Nut	M6, Stainless Steel A2.70
5	Plain Washer	M6, Stainless Steel A2.70
6	Gasket	Silicone Sponge
7	acket	Stainless steel AISI 316L/304, Thickness: 1.5 mm

Enclosure	L	L1	W	W1	H	H1	N
STB 1	163	-	163	229	90	75	4
STB 2	263	151	163	229	100	85	6
STB 3	413	301	263	329	115	100	12

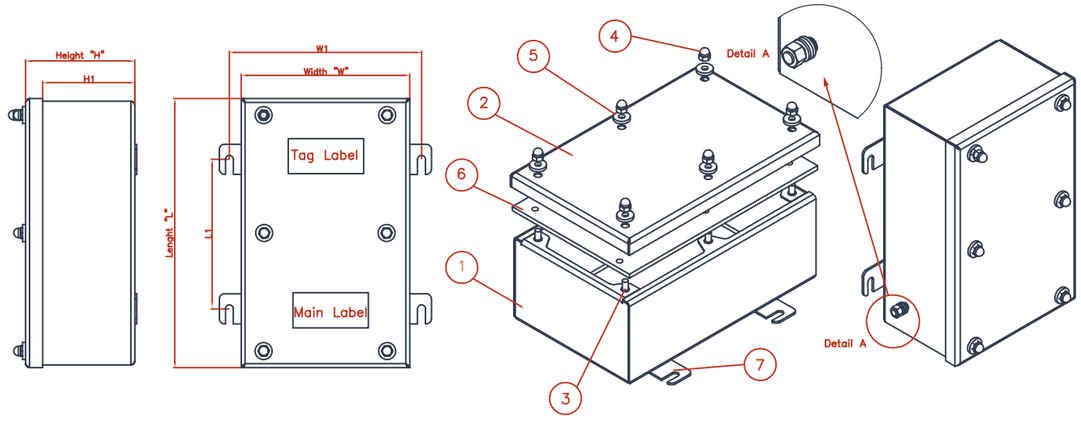

SJB Series

Hinged terminal and junction boxes for rail-mounted Ex terminals.

SJB Series

The SJB range of enclosures, has been designed to accommodate rail mounted Ex. certified terminals. The enclosure can be equipped with gland plates from greater side as well as smaller side to facilitate cabling. A padlockable version is available on request for additional security.

Features

Category: Explosion proof Enclosure, hinged Lid

Material: Stainless Steel AISI 316L/304, Sheet Steel

Marking: Ex e IIC T6 IP66

Application: Ex. Junction Box, Industrial Control Station

Technical Data	
Explosion proof Enclosure, SJB Series, Suitable for Zone 1,2,21,22	
Marking to 94/9/EC	Gas: II 2 G Ex e IIC T6 Gb
	Dust: II 2 D Ex t IIIC 100°C
Degree of Protection	IP 66
Ambient Temperature	-20°C to +55°C
EC Type examination certificate	LOM 15 ATEX 2012
Material	Stainless Steel AISI 316L/304
	Sheet Steel ST 37
	Finish in epoxy powder electrostatic coating
	Thickness: 1.5 to 2 mm

PERMITTED DISSIPATED WATTAGE (W)				
TYPE	T6		T5	
	T85°C		T100°C	
	$T_a \leq 40°C$	$T_a \leq 55°C$	$T_a \leq 40°C$	$T_a \leq 55°C$
SJB 1	16.5	10.3	22.8	16.5
SJB 2S/ SJB 2L	30	18.7	41.1	30
SJB 3S/ SJB 3L	38.7	24.2	53.3	38.7
SJB 4S/ SJB 4L	37.2	23.2	51.1	37.2
SJB 5S/ SJB 5L	53.4	33.4	73.4	53.4
SJB 6	71.1	44.5	97.8	71.1
SJB 7	75.8	47.4	104.2	75.8
SJB 8	103.5	60.5	153	103.5
SJB 9	124.1	77.6	170.6	124.1
SJB 10	178.1	111.3	244.9	178.1
SJB 11	196.6	122.9	270.3	196.6

Product Name	N	L	W	H	L1	W1
SJB 1	8	263	163	153	322	-
SJB 2S	12	293	263	149	360	153
SJB 2L	12	293	263	198	360	153
SJB 3S	16	363	313	170	426	201
SJB 3L	16	363	313	192	426	201
SJB 5L	18	413	363	200	472	246
SJB 6	22	463	413	200	525	300
SJB 8	26	663	463	200	725	350

The dimensional tolerance is ± 3 mm

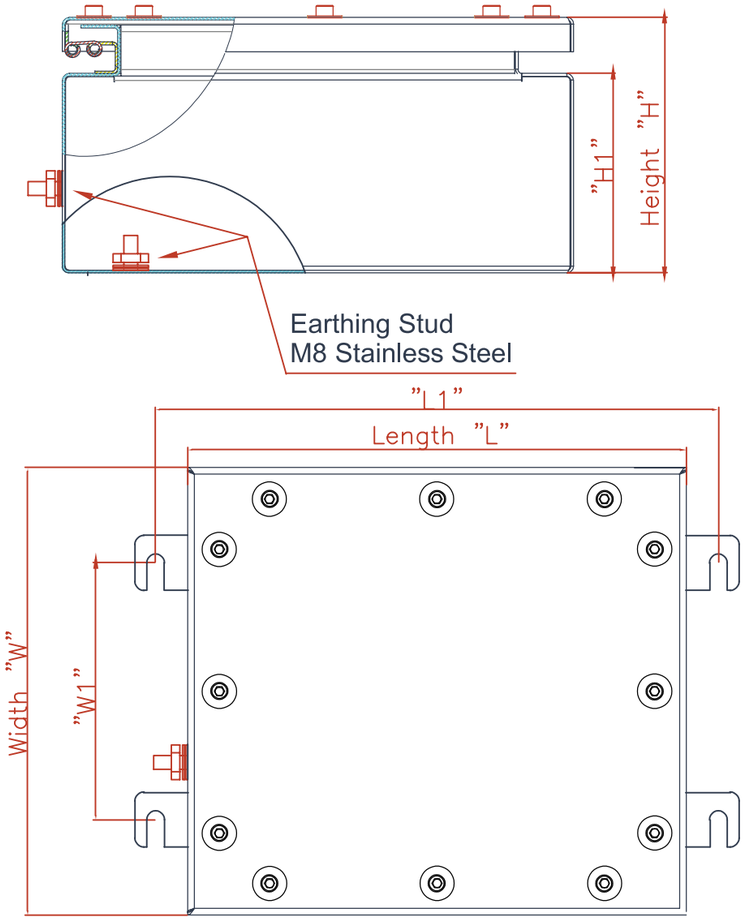



MAXIMUM NUMBER OF TERMINALS											
TYPE	Size (mm)	NO. OF RAILS (vertical)	MAX NUMBER OF TERMINALS								
			WIRE CROSS SECTION (mm2)								
	L X W X H		2.5	4	6	10	16	25	35	50	95
SJB 1	263x163x150	1	30	28	22	18	14	13	11	_	_
SJB 2S	293x263x150	2	71	66	53	42	34	31	25	21	_
SJB 2L	293x263x200	2	71	66	53	42	34	31	25	21	_
SJB 3S	363x313x150	2	131	123	98	78	63	58	47	39	_
SJB 3L	363x313x200	2	131	123	98	78	63	58	47	39	_
SJB 4S	413x263x150	2	104	97	78	62	50	46	37	31	12
SJB 4L	413x263x200	2	104	97	78	62	50	46	37	31	12
SJB 5S	413x363x150	3	156	146	117	93	75	69	56	46	12
SJB 5L	413x363x200	3	156	146	117	93	75	69	56	46	12
SJB 6	463x413x200	4	242	226	181	145	116	106	88	72	14
SJB 7	563x363x200	3	231	217	173	138	111	102	84	69	18
SJB 8	663x463x200	4	375	351	281	225	180	165	136	112	22
SJB 9	740x560x200	5	552	517	414	331	265	243	200	164	26
SJB 10	913x663x200	6	813	762	609	487	390	358	295	242	65
SJB 11	955x730x200	7	1061	995	796	637	509	468	386	316	72

SJB Series



SJB Series

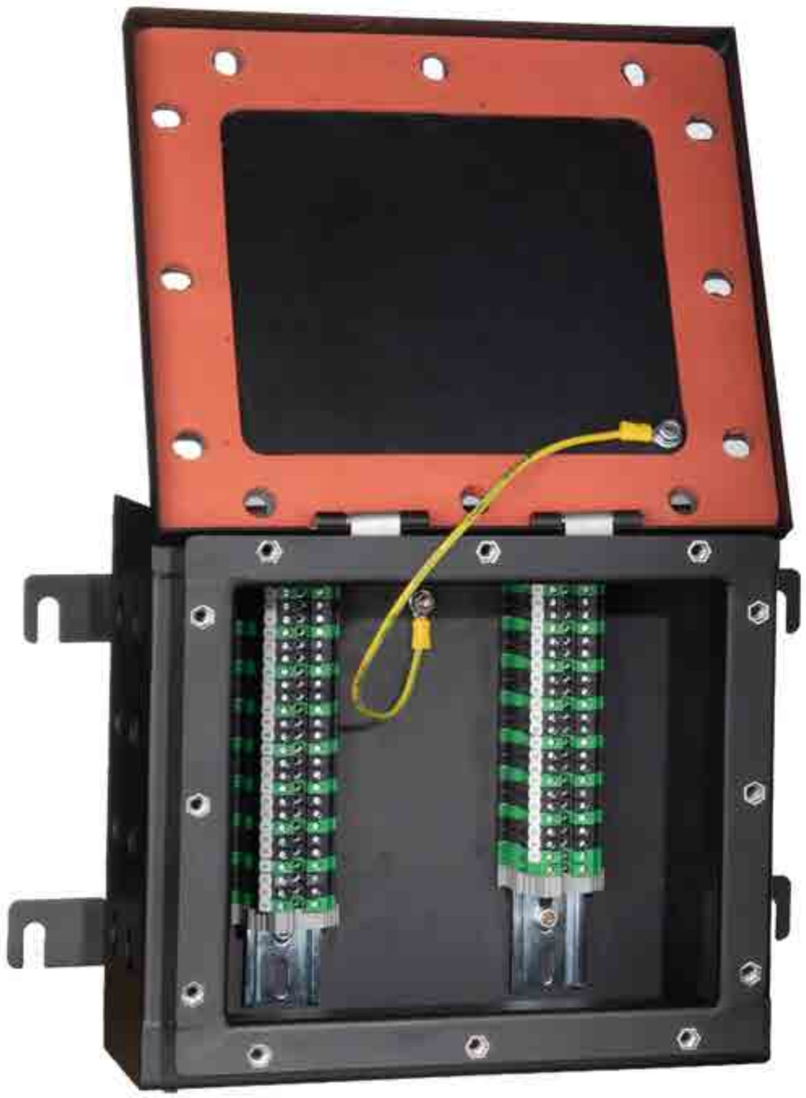

DJB Series

Die-cast aluminium junction boxes in several certified sizes.

DJB Series

The DJB range of enclosures, has been designed to accommodate rail mounted Ex. certified terminals. Any side of enclosure can be punched according to customer request.

Features

Category: Explosion proof Enclosure, hinged Lid

Material: Copper-free Die Casting Aluminum Alloy

Marking: Ex e IIC T6 IP66

Application: Ex. Junction Box, Industrial Control Station

Technical Data	
Explosion proof Enclosure, DJB Series, Suitable for Zone 1,2,21,22	
Marking to IECEx	Ex eb IIC T6...T4 Gb
Degree of Protection	IP 66
Ambient Temperature	-20°C to +55°C
IECEx certificate No.	IECEx EPIL 25.0004X
Material	Copper-Free Die Cast Aluminum Alloy
	Finish in epoxy powder electrostatic coating

Maximum Number of Terminals									
Enclosure	No. of Rails	Wire Cross Section (mm2)							
		2.5	4	6	10	16	25	35	50
DJB 00	1	11	10	8	7				
DJB 10	1	20	18	14	12	9			
DJB 20	1	36	34	27	22	17	8		
DJB 25	2	60	56	34	28	22	13	11	9
DJB 30	2	73	69	41	33	26	16	13	11

Bill of Material		
Part No.	Part Name	Material
1	Body	Copper-free Die Cast Aluminum Alloy
2	Lid	Copper-free Die Cast Aluminum Alloy
3	Cross Recessed Screw	Stainless Steel A2.70 M6x20
4	O-ring	ø3 mm Silicone Sponge
5	Base Board	Galvanized Steel
6	Explosion proof terminal	
7	Din Rail	Galvanized Steel
8	Earthing arrangement	Stainless Steel A2.70 M6x20

Dimension Table					
Enclosure	L	L1	W	W1	H
DJB 00	110	90	110	60	80
DJB 10	160	140	160	110	80
DJB 20	260	240	160	110	90
DJB 25	320	300	220	170	95
DJB 30	370	350	260	210	100

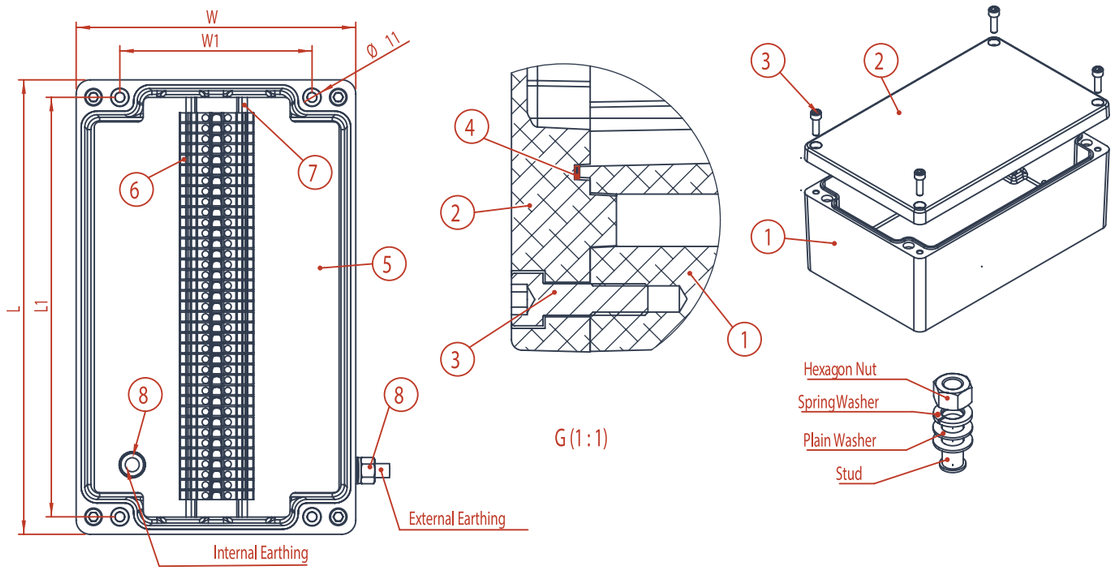



Max Allowed dissipated Wattage			
Enclosure	Ta -20°C to 55°C		
	T6	T5	T4
DJB 00	5.63	6.32	6.86
DJB 10	7.58	9.08	9.61
DJB 20	9.24	11.28	11.86
DJB 25	12.06	15.18	15.61
DJB 30	14.59	15.76	16.11

EJB Series

Large explosion proof enclosures for switchgear and control assemblies.

EJB Series

The EJB range of explosion proof enclosure has been designed to accommodate every industrial electrical equipment such as MCCB, MCB, contactor etc. The major application of enclosure is Ex. switchgear, Control station and junction box. The enclosure can be equipped with glass window.

Features

Category: Explosion proof Enclosure, hinged Lid

Material: Copper-free Cast Aluminum Alloy

Marking: Ex d IIB +H2 T4-T6 IP66

Application: Ex. Switchgear, Ex. Control Station, Ex. Junction Box

Technical Data	
Explosion proof Enclosure, EJB Series, Suitable for Zone 1,2,21,22	
Marking to IECEx	Ex db IIB+H2 T6...T4 Gb
Degree of Protection	IP 66
Ambient Temperature	-20oC to +55oC
IECEx Certificate No.	EPIL 25.0005X
Material	Copper-Free Cast Aluminum Alloy
	Finish in epoxy powder electrostatic coating

Enclosure	L	W	H	H1	L1	W1
EJB 1	266	216	120	29	210	160
EJB 2	316	246	160	30	260	190
EJB 3	496	366	250	33	440	310
EJB 4	666	466	250	47	610	410
EJB 5	816	566	280	55	760	510
EJB 6	916	666	320	65	860	610

Part No.	Part Name	Material
1	Body	Copper-free Cast Aluminum Alloy
2	Lid	Copper-free Cast Aluminum Alloy
3	Screw	Stainless Steel A2.70 M6-M10
4	Hinge	Zamac
5	Earthing	Stainless Steel A2.70 M8
6	Screw	M6x10 Galvanized Steel
7	Base Board	Galvanized Steel thickness 1 mm
8	acket	Galvanized Steel thickness 2 mm

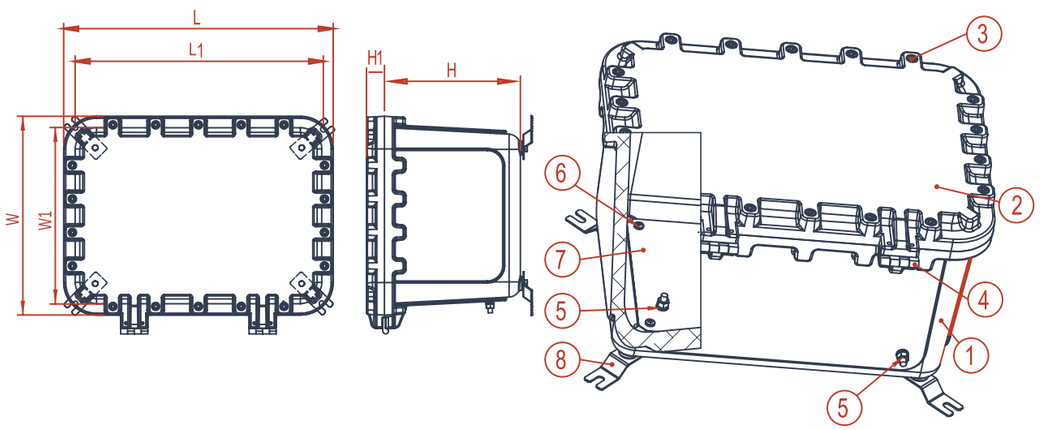





DAYHEEM



ACTUATORS

Push-button, emergency-stop, selector-switch, signal-lamp and eakar actuators.

Actuators

Dayheem actuators enable external operation of electrical components installed inside explosion-proof enclosures.

Features

Category: Explosion proof Actuators

Material: Aluminum Alloy

Marking: Ex d IIC T6 IP66

Technical Data	
Explosion proof Actuators, Suitable for Zone 1,2,21,22	
Marking to 94/9/EC	Gas: II 2 G Ex d IIC T6 Gb
	Dust: II 2 D Ex t IIIC 100oC
Marking to IECEx	Ex db IIB+H2 T6...T4
Degree of Protection	IP 66
Ambient Temperature	-20°C to +55°C
EC Type examination certificate	LOM 15 ATEX 2013
IECEx Certificate No.	EPIL 25.0005X
Material	Aluminum Alloy Body
	Nickel-Plated ass Shaft
	Silicon O-ring
	Galvanized Steel Holder



List of Actuators

Push button, spring return	PBT 1
Signal lamp	SGL 1
Emergency stop, turn to release	EMG 1
Emergency stop, turn to release, Padlockable	EMG 1P
Emergency stop, with key	EMG 2
Selector switch	ROT 1
Selector switch with key	ROT 2
MCB Actuator	ROT 3
MCCB Actuator	ROT 4
MPCB Actuator	ROT 5

CG-IN Series

Industrial single-compression glands for non-armoured cables.

[CG-IN Series]



The CG-IN series of cable glands has been designed as single compression suitable for industrial non-armored cables.

Features

Category: Industrial Non armored Cable Gland

Material: Nickel-Plated Brass, Stainless Steel

Marking: IP66

Ref.	Thread Size	Capacity		SW
		Min Dia	Max Dia	
CG-IN-S	M16	5	8.5	19
CG-IN-A	M20	8.5	12.6	22
CG-IN-B	M25	11	18	28
CG-IN-C	M32	17	22	35
CG-IN-D	M40	20	30	45
CG-IN-E	M50	29	35	55

CG-IA Series

Industrial double-compression glands for armoured cables.

CG-IA Series

The CG-IA series of cable glands is double compression type suitable for industrial armored cables.

Features

Category: Industrial Armored Cable Gland

Material: Nickel-Plated Brass, Stainless Steel

Marking: IP66



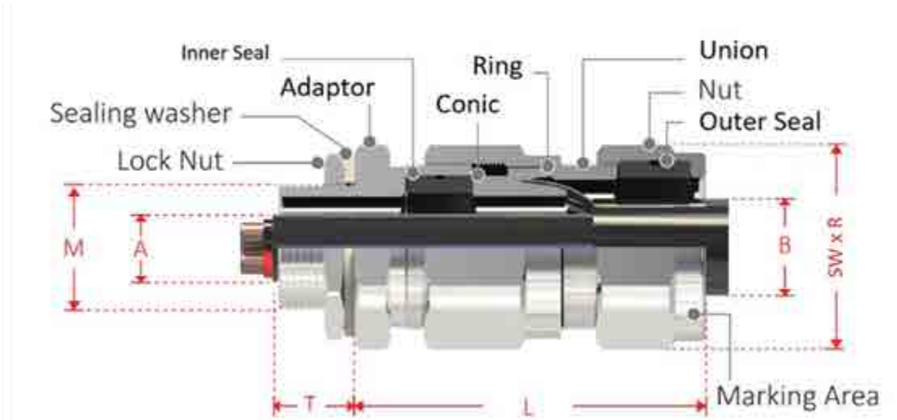

Ref. Size	M	T	A		B		L	SW x R
			Inner Sheath		Outer Sheath		Length (mm)	
			Min	Max	min	Max		
OS	M16/M20	15	3	7.6	10.5	16	70	25x28
S	M20	15	7.5	11.5	10.5	16	70	25x28
A	M20	15	10.5	14	13.5	20	70	30x35
B	M25	15	13.3	19	18	25.5	70	35x41
C	M32	15	19	25	25	33	75	45x52
C2	M40	15	25	32	33	42	75	55x62
D	M50	15	32	44	40	52	85	65x75
E	M63	15	40	56.3	46	65.3	95	80x92
F	M75	15	50.5	68	57	78	95	95x107

CG-EN Series

Explosion proof glands for non-armoured cables.

[CG-EN Series]

The CG-EN series is designed as single compression cable gland suitable for non armored cables of explosion proof equipment.

Features

Category: Explosion proof Non Armored Cable Gland

Material: Nickel-Plated Brass, Stainless Steel

Marking: Ex e/d IIC IP66

Nomenclature:

CG - ** - ** - ***

Example: CG - EN - Os - M20

- Entry Thread, e.g. M20, 4”8 NPT
- **Reference No.** : It shows the body size of gland
- **Type of cable:**
  - **EA :** Armored(SWA ,AWA, STA)/ Shielded or alded cables
  - **EN :** Non armored cables
  - **EL :** lead-sheathed cables

Cable glands suitable for Non armored cables							
Ref.	Entry Thread		Outer sheath capacity			Tightening Torque (N·M)	SW x R
	Metric	NPT	Seal No.	Min (mm)	Max (mm)		
Os	M16/M20x1.5	3/8" 14 NPT	S01	3	8.3	8	25 x 29
S	M20x1.5	1/2" 14 NPT	S02	7.5	11.5	10	25 x 29
A	M20x1.5	1/2" 14 NPT	S03	11.3	13.5	10	30 x 35
B	M25x1.5	3/4" 14 NPT	S04	12.5	19.4	12	35 x 40
C	M32x1.5	1" 11 1/2 NPT	S05	18.5	26.4	16	45 x 52
C2	M40x1.5	11/4" 11 1/2 NPT	S06	25	32.4	20	55 x 64
D	M50x1.5	11/2" 11 1/2 NPT	S07	31	42.8	20	65 x 75
E	M63x1.5	2" 11 1/2 NPT	S08	41	54.8	25	80 x 92
F	M75x1.5	2 1/2" 8 NPT	S09	52	65.5	30	95 x 110
G	M90x1.5	3 1/2" 8 NPT	S10	64	80	45	115 x 133
J	M100x1.5	4" 8 NPT	S11	78	89	50	125 x 144





Technical Data	
Explosion proof Cable Gland CG-EN series, Suitable for Zone 1,2,21,22	
Marking to IECEx	Ex db IIC Gb, Ex eb IIC Gb
Degree of Protection	IP 66
Ambient Temperature	-20°C to +55°C
IECEx certificate	EPIL 25.0006U
Material	Nickel-plated ass
	Stainless Steel AISI 316L/304
	Silicone Seal



CG-EA/EL Series

Explosion proof glands for armoured and lead-sheathed cables.

CG-EA/EL Series



The CG-EA series is designed as double compression cable gland suitable for armored cables of explosion proof equipment. The EL series comprises a lead washer for lead sheathed cables.

Features

Category: Explosion proof Armored Cable Gland

Material: Nickel-Plated Brass, Stainless Steel

Marking: Ex e/d IIC IP66

Nomenclature:

CG - ** - ** - ***

Example: CG - EA - Os - M20

- Entry Thread, e.g. M20, 4”8 NPT
- **Reference No.** : It shows the body size of gland
- **Type of cable:**
  - **EA :** Armored(SWA ,AWA, STA)/ Shielded or alded cables
  - **EN :** Non armored cables
  - **EL :** lead sheathed cables



Technical Data	
Explosion proof Cable Gland CG-EA/EL series, Suitable for Zone 1,2,21,22	
Marking to IECEx	Ex db IIC Gb, Ex eb IIC Gb
Degree of Protection	IP 66
Ambient Temperature	-20°C to +55°C
IECEx certificate	EPIL 25.0006U
Material	Nickel-plated ass
	Stainless Steel AISI 316L/304
	Silicone Seal

Cable glands suitable for Armored and Lead sheathed cables									
Ref.	Entry Thread		Inner sheath capacity			Outer sheath capacity			SW x R
	Metric	NPT	Seal No.	Min (mm)	Max (mm)	Seal No.	Min (mm)	Max (mm)	
Os	M16/ M20x1.5	3/8" 14 NPT	S01	3	8.3	S12	10.5	16	25 x 29
S	M20x1.5	1/2" 14 NPT	S02	7.5	11.5	S12	10.5	16	25 x 29
A	M20x1.5	1/2" 14 NPT	S03	11.3	13.5	S13	12.9	21	30 x 35
B	M25x1.5	3/4" 14 NPT	S04	12.5	19.4	S14	17	26.5	35 x 40
C	M32x1.5	1" 11 1/2 NPT	S05	18.5	26.4	S06	25	32.4	45 x 52
C2	M40x1.5	11/4" 11 1/2 NPT	S06	25	32.4	S07	31	42.8	55 x 64
D	M50x1.5	11/2" 11 1/2 NPT	S07	31	42.8	S15	39.5	52.3	65 x 75
E	M63x1.5	2" 11 1/2 NPT	S08	41	54.8	S09	52	65.5	80 x 92
F	M75x1.5	2 1/2" 8 NPT	S09	52	65.5	S16	64	78	95 x 110
G	M90x1.5	3 1/2" 8 NPT	S10	64	80	S17	78	89	115 x 133
J	M100x1.5	4" 8 NPT	S11	78	89	S18	88	103	125 x 144

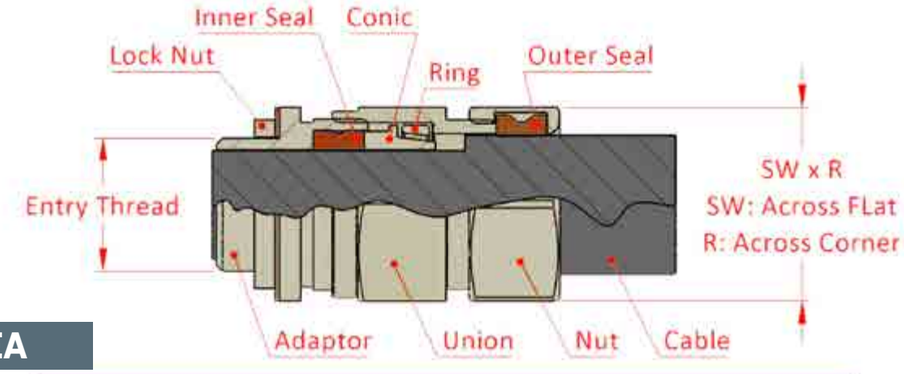

CG-EA

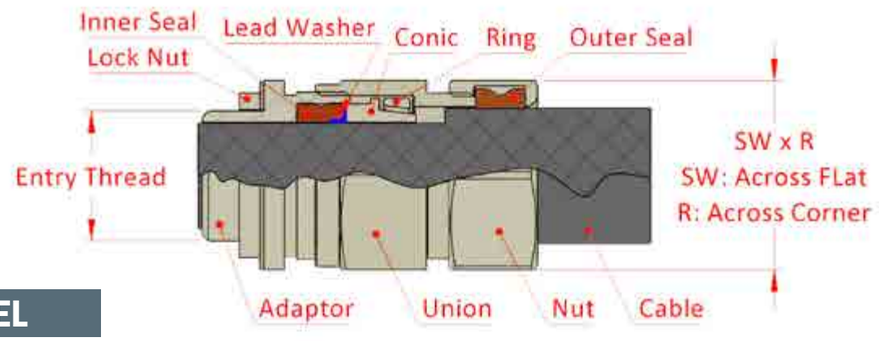

CG-EL

EARTH TAG

Earth tags provide a reliable method for earthing and bonding of cable glands and electrical equipment.



Earth Tag					
Ref.	D2	D3	D4	L1	L2
Os	16.5	26	6.5	30	12
S/A	20.5	27	6.5	33	12
B	25.5	35	6.5	35	15
C	32.5	45	8.5	43	15
C2	40.5	53	8.5	45	20
D	50.5	65	8.5	58	20
E	63.5	82	10.5	66	20
F	75.5	95	10.5	73	25
G	90.5	114	10.5	85	25
J	101	125	10.5	118	30

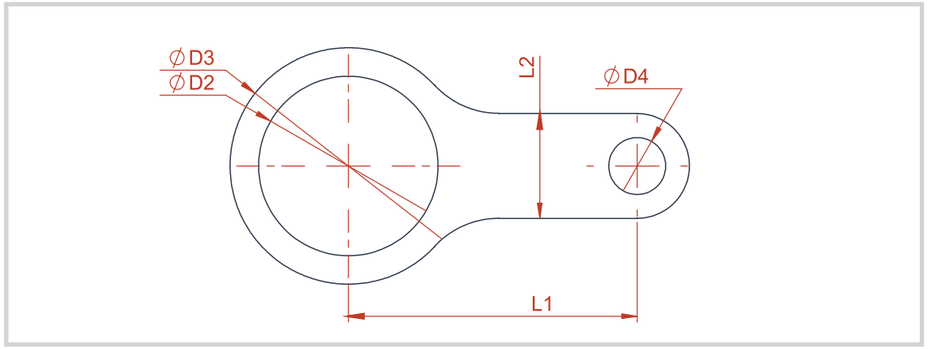

SHROUD

Shrouds are used to protect cable entry thread and provide additional mechanical support for cable gland.



Shroud			
Ref.	D5	D6	L3
OS/S	25	29	70
A	30	34	70
B	36	40	70
C	46	50	80
C2	56	60	80
D	66	70	100
E	81	85	100
F	96	100	100
G	117	121	145
J	127	131	145

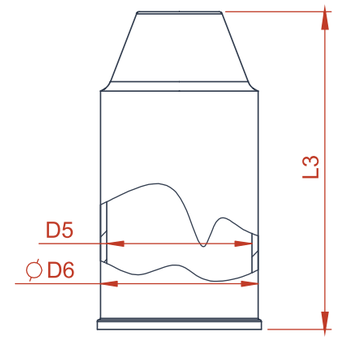

LOCK NUT

Lock nuts are used to secure cable glands and accessories ensure mechanical stability and tight installation.



Lock Nut		
Ref.	SW	D2
Os	20	M16
S/A	25	M20
B	30	M25
C	40	M32
C2	50	M40
D	60	M50
E	70	M63
F	85	M75
G	90	M90
J	110	M100

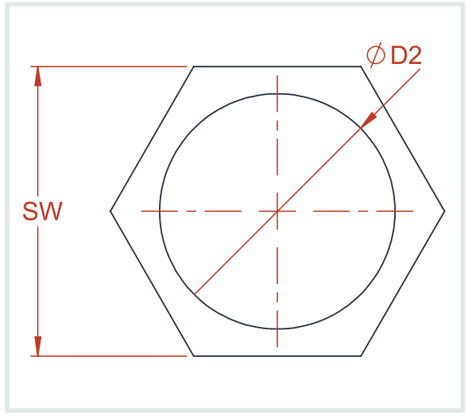

CELLULOSIC WASHER

Cellulosic washers are used to provide sealing and prevents ingress of dust and moisture between mating surfaces.



Cellulosic Washer		
Ref.	D2	D3
Os	16	20
S/A	20	25
B	25	30
C	32	40
C2	40	50
D	50	60
E	63	70
F	75	85
G	90	100
J	100	110

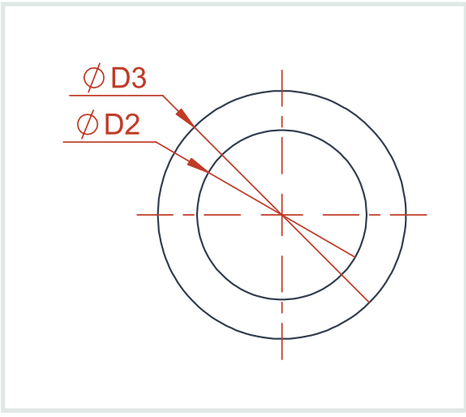

DAYHEEM
ELECTRIC INDUSTRY

Address: No. 402, Imam Khomeini St.
Ghassem Abad Rd., Khavaran Rd.
Tehran, Iran

0098(21)36857693
www.DAYHEEM.ir
sales@dayheem.ir